MENLO PARK RECORDER

A PAPER DEVOTED TO THE BEST INTERESTS OF MENLO PARK AND SAN MATEO COUNTY

VO MENLO PARK, SAN MATEO COUNTY, CALIFORNIA, SATURDAY, JUNE 27, 1925 No. 38

Incorporation Proceedings to be Decided in Court

At a meeting held Thursday night in the club rooms of the Menlo Park Improvement Association, and presided over by F. S. Becker, a committee of five was named to secure an attorney to carry the case of the proponents of incorporation to court in an endeavor to get a decision as to what constituted acreage and what did not and why certain property included in the incorporation proceedings and map of its boundaries should be excluded. The committee will also raise the necessary funds to carry on the fight by subscription. Members of the committee are: L. H. Cook, J. E. Harcom, George B. Walsh, L. Alliger, and W. J. Murray.

The decision to take the matter of incorporation to the superior court was definitely agreed upon at this meeting and a property owner whose land was excluded from the proposed municipality on a revised map of the boundaries presented by Attorney Lee T. Ross and adopted by the board of supervisors will bring court proceedings in an effort to show why his property and other so excluded should not be included.

It is claimed that there are more residents in the property excluded who desire to come into the municipality than desire to be excluded, and the question arises, why the majority should not rule.

A continuance of the case in regard to the property allowed to incorporate by the map adopted by the supervisors will be sought. It was determined last Thursday night that if the town went ahead and attempted to incorporate the reduced area allotted to it by the map adopted by the supervisors, it would stand a big chance of losing its jurisdiction over the territory which it proposes to take in, and which has been denied through the protest of some of the property owners, who claim that their property holdings comprise outside acreage or agricultural land.

George Walsh made the motion to take the matter to court after a lively debate had been held between those of the audience as to the best method of proceeding. Many were in favor of incorporating with the limited area allowed by the supervisors, with the idea of taking in the other territory as soon as possible. Others were of the opinion that if this was done Atherton would most likely take in at least some of the area which Menlo Park wants.

At the request of the chairman, Walsh reviewed previous attempts of Menlo Park to incorporate. He said that the action of the board of supervisors had been marked by a series of occasions when they had reversed themselves on the policies of incorporation, and that Menlo Park had "received the worst of the deal each time."

ST. JOSEPH'S ALUMNI TO BANQUET AT AUX GOURMETS

Invitations have been sent out to the Alumni of St. Joseh's school of Menlo Park to attend a banquet to be held at Aux Gourmets on the highway at Atherton and next Thursday evening, July 2. It is planned to make these gatherings annual affairs in the future, so as enable the former students of the school to get-to-gether a least once a year to renew old friendships.

It is expected that over one hundred reservations will be made for the dinner which is to be held at seven o'clock and the price is $1.50 per person. A live committee consisting of Miss Kathleen Kearney, Miss Regina Harrington, William Michel, John Morey and Joseph Nash is planning many novel entertainment features for the affair.

MRS. N. McLOUGHLIN PASSES AWAY IN IRELAND

E. J. McLoughlin, proprietor of the Menlo Shoe Store, received a letter last Monday telling of the the death of his aged mother at her home in Ireland.

Mrs. N. McLoughlin died on May 22d, at the ripe old age of 76 years, and leaves to mourn her loss four sons, two of whom are in California, one son who was with his mother at the time of her death and one son who was on his way to Ireland to visit her, and two daughters who were also at home at the time of her death.

The sympathy of the entire community goes out to Mr. McLoughlin in his hour of sorrow.

VARIOUS CHAIRMEN FOR P. T. A. DEPARTMENTS SELECTED

Last Friday evening the new officers of the Menlo Park Parent-Teacher Association met at the home of the president, Mrs. J. J. Garland in Stanford Park and selected chairmen for the various committees of the organization to serve for the coming year as follows:

Better Films—W. S. Bower.

Child Welfare and Hygiene—Mrs. A. E. Thomas.

Membership—Mrs. C. P. Parsons.

Publicity—Mrs. Thos. Stentiford.

Historian—Mrs. J. Snover to succeed Mrs. I. Miller who resigned on account of illness.

Work is progressing rapidly on the new stores being built on the corner of Santa Cruze avenue and the Highway. Work has also been started on the new bank building.

FENTON PROPERTY OFFERS CHANCE FOR IDEAL HOME

W. J. Fenton of Oakland, was a visitor in Menlo Park last Saturday and Sunday and noticed how prosperous everything seemed in this town.

He has engaged the services of George W. Earle, owner of the T. N. T. Lunch, to act as local sales agent, for the Fenton Properites, in Menlo, and he is duly equipped with a license and deposit receipts, and is a live-wire salesman, pleasant to meet, honest and straightforward in all his statements.

All of Fenton Subdivision (13) has been sold to satisfied home builders, the last remaining lot being sold for $800 cash recently. Fenton Subdivision (16) is now on the Market, with a new Santiary District Sewer System, new cross streets, etc., and J. J. Hara of this town is now planting attractive flowers on all the lots.

This property is better than Belle-Monte, or Oak Park, due to the exceptionally fine climate, rich garden soil and such a beautiful place for growing children.

DR. C. H. WOODRUFF HERE TO PRACTICE ABRAMS METHOD

Dr. Charles Homer Woodruff of Abrams College of Electronic Medicine in San Francisco has moved to Palo Alto where has leased the palatial residence of George V. Jensen at the corner of Ramona and Lytton avenues, which will be occupied as both his office and residence.

Dr. Woodruff comes to this community very highly recommended and while the writer is not familiar with the diagnosis and treatment of diseases by he Abrams method, it is claimed that they will take a drop of blood and tell what kind of a disease exists and by localizing it, it is claimed they are able to determine that portion of the body in which the disease exists. With this new method, Dr. Woodruff hopes to help suffering humanity in this community and any who are in need of medical advice would do well to consult him.

JOHN J. GARLAND IS APPOINTED MILK INSPECTOR

John J. Garland was appointed county milk inspector by the board of supervisors Monday to take the place of George W. Fry, who resigned a week ago. Garland is a graduate of the agricultural department of the University of Wisconsin and takes his new position with the very highest of recommendations.

LARGE NUMBER OF CHILDREN PROMOTED IN MENLO SCHOOL

The following pupils of the Menlo Park School have successfully finished the prescribed work in the various grades and have been awarded certificates of promotion to higher grades by the school. The following is the list in full furnished by Prof. W. S. Bower:

First Grade

Margaret McLoughlin.
Dorothy Gilroy.
Charles Palmer.
Sikago Toda.
Tom Iwasaki.
Raymond Simonsen.
Ramona Lyle.
Juanita Campbell.
Hiroshi Honda.
Avelena Mendonca.

Promoted to Second Grade

Annette Stiller.
Charlotte Thomas.
Sammy Kotter.
John Vestal.
Cecil Snover.
Dorothy Shepherd.
Dorothy Bearce.
Dixie Eiselstein.
Hazime Yuki.
Kikue Tanaka.
Ruth Inonye.
Bobby Grill.
Chester Slinger.
Anna-May Emma.
Frank Cater.
Shinichi Oba.
Jenny Johnson.
Aimee Hoff.
Margaret Hoff.
Marion Douglas.
Woodrow Dupont.
Helen Perry.
Emamay Cooper.
Ethel Ekholm.
Mildred Hutchinson.

Promoted to Third Grade

John Gilroy.
Truman Nielsen.
Joe Yee.
Sadaichi Suyama.
Ruth Ekholm.
John Chuck.
William Nelson.
Joe Wong, Jr.
Misao Yuki.
Helen Hoss.
Raymond Chew.
Philip Chapin.
Stanford Herzbrun.
Toshiko Honda.
Yachiyo Toda.

High Third Grade

Jean Harper.
Ada Johnson.
Lena Orlandi.
Wanda Thomas.
Josephine Garland.
Fanita Jacobsen.
Effa Jean Lightbody.
Della Paris.
Matthew Campbell.

Promoted to Fourth Grade

Helen Landis.
Cumiki Iwasaki.
Freda Snover.
Lillie Valla.
Audrey McAboy.
Axel Bachlund.
Vincent Emma.
John Hummel.
Susuma Okamoto.
Walter Chew.
Yukio Honda.
Buddy Reynolds.
Willie Chuck.
Wilfred Walker.
Frances Becker.
June Bigcraft.
Alice Chew.
Frances Logan.
Nina Thomas.
Ramona Whipple.
Shirley Andersen.
Kenneth Douglas.
Neal Landis.
Kin Chuck.
Kim Wong.
Fumiko Yuki.

Promoted to the Fifth Grade.

Florence Ellis.
Lola Lightbody.
Ruth Douglas.
Charlotte Patterson.
Gladys Imrich.
Marion Allguire.
Rosalie Bowman.
Marion Lewis.
Paul Bearce.
Frank Backlund.
Henry Buchman.
Frederick Becker.
David Chew.
William Chew.
Bobby Cooper.
Einar Ekholm.

Continued on Back Page

MENLO GRADUATES ARE GIVEN DIPLOMAS

Six Menlo Park and five Redwood City students were awarded their degrees at Stanford Monday. They are:

Economics—Ernest King Bramblett, Menlo Park. Robert Sinclair Murray, Redwood City. John Hammerson Poole, Redwood City.

Education, Graphic Art—Mercedes Peace, Redwood City.

Civil Engineernig—Carroll Lynne Blacker, Menlo Park.

Mechanical Engineering—Ernest Nathaniel Merrill, Redwood City.

Botany—Ira Loren Wiggins, Menlo Park.

Classical Literature—Pauline Gertrude Marum, Menlo Park.

English—Parley A. Christensen, Menlo Park.

Electrical Engineering — Charles Vincent Litton, Redwood City.

Mechanical Engineering—Patrick Foster Mumford, Menlo Park.

NATIONAL AUTO CLUB FAST BECOMING POPULAR

The California motorist is now the best protected in the world. The last year has changed the idea of an automobile club from merely a clearing house for touring information and maps to a comprehensive service that covers every highway and byway in the state, one that offers assistance to the tourist not only in the way of directing his route but in guarding his car by night and day in his trips about California.

The National Automobile Club has brought about this change and, even now, it is the only organization which provides a state-wide Club service without limit as to distance and which does not attempt to compete with garages or service stations or with any firm engaged in legitimate business. It has rather gone into partnership in the field of public service with more than 450 garages in California and through them provides a motoring protection which has proved its worth in the year in which it has been operated.

Through its News Bureau and through the cooperation of the newspapers and periodicals of California, it endeavors to stimulate motor travel, to reduce automobile thefts and to assist in the education of the public in the interests of safety. This Bureau does not attempt to sell memberships by sales propaganda in the guise of news. It is maintained solely for the preparation of material of benefit to the motor car industry and to the motoring public at large.

The Club was organized by the Pacific Coast Automobile Underwriters Conference in the belief that the Board Insurance Companies should extend their field activities to include a complete and practical service to the public. The Club itself does not sell insurance. It is purely a service organization and the benefits of memberships are not confined to policy-holders in any company. The member is free to place his insurance wherever he may choose.

That the National Automobile Club has met an urgent need in the motoring field is evidenced by its rapidly growing membership, a membership which was built up to twenty thousand within the first year of its operation, and by the satisfied thousands who have had occasion to call upon its service units for aid. More than sixty per cent of the members o fthe Club have used the Club service in the past year.

The swimming pool at the Sequoia Union High School will be thrown open to the public next Monday. The pool is located in the rear of the gymnasium and is 40x70 feet in size. Inside dressing rooms for women and outside for men, with a matron in charge of the women's quarters. It will be open from 1 to 8 p. m. each day with a life guard and swimming director in charge at all times.

Oscar Olsen was elected president of the Sequoia Alumni Association at the annual reunion and banquet held last Saturday night and attended by about one hundred members of the Asociation. The 1925 graduating class were honor guests of the evening. Other officers elected included: Kendall Town, vice-president and Gladys Palmer, secretary-treasurer.

Advertise in the Recorder! ! !

Atherton Zoning Law Protested

Amidst the protests of a number of property holders who resented the exclusion of their property from the newly drawn commercial zone in Atherton the new zoning ordinance became a law at last Wednesday's meeting.

Three zones as follows are provided by the new law:

1.—Commercial zone, taking in part of the highway frontage already occupied by business property.

2.—Industrial zone, taking in the territory at the extreme limits of the town toward he bay.

3.—Residential zone, occupying all the remainder of the municipality.

Among the petitioners and complainants whose communications were read in this connection were: Mr. and Mrs. J. B. Coryell; Harry See, realtor; Ed White, strawberry grower; Mark McCann, real estate dealer. Mr. McCann, through his attorney, Lee T. Ross, set forth that his office was located on the present site years before Atherton became a town and that since it is only 150 feet away from the line the boundaries should be extended that far. Hearing on these complaints was postponed until Friday, July 17, when it is hoped that a full membership will be present.

The street work ordinance was also laid over until that time.

City Attorney Arthur Redington was instructed to draw up an ordinance for reducing fire hazards along the lines of the Menlo Park Fire District regulations.

Elmer Jennings, city recorder reported that in the past month 105 cases had come up in his court and that 57 had been fined, 32 dismissed and 16 were still pending. The sum of $520 had been collected in fines.

CAMP FIRE PERMITS REQUIRED IN CAL. NATIONAL FORESTS

Camp fire permits must again be secured this year before it is permissable to build any kind of an outdoor fire in National Forest lands in California, according to announcement by the U. S. Forest Service headquarters in San Francisco. This regulation covers not only ordinary outdoor camp and picnic fires, but fire in any kind of a stove using gasoline, coal oil, wood, or other forms of fuel. Permits may be secured free of charge from any Federal forest officer, State fire warden, and other designated agencies such as automobile clubs and sporting goods stores.

The 1925 camp fire permit differs from that of previous seasons, state forestry officials, in that this year the permit is not valid until the applicant has signed the permit; which signature binds the permittee to observe certain rules in respect to care with camp fires, burning tobacco, matches, etc. Windshield stickers will not be used this year to designate holders of Federal camp fire permits.

General camp fire permits covering all national forests in California, or the entire summer vacation season, will not be issued. Permits will be restricted to individual forests and trips, except that where visitors are planning a **continuous trip** through a number of different Government forests, a permit covering the forests concerned and for the period of the trip may be obtained. Camp fire permits for the three national forests in Southern California can only be secured from officers of these forests or their designated agents.

The attention of all visitors and users of national forest lands is especially directed to the fact that the throwing away of burning tobacco, matches, or other inflammable material which may cause a fire is prohibited by Federal regulation. Violators of this regulation are subject to fine and imprisonment, or both. A similar state law, passed by the last Legislature and signed by Governor Richardson, became effective this week throughout California.

Mr. and Mrs. L. Nolin and son of Dayton, Mo., have taken the home of Mr. and Mrs. Jack Gladstone here for the summer. Mr. Nolin is superintendent of schools of Dayton.

Phone Co. Renders Invaluable Service

Based on the investigations of the author, Harold R. Bunce, the New York Sun published an article which forcefully indicates the efforts of The American Telephone and Telegraph Company to protect the investors of The American Telephone and Telegraph Company stock. The article follows in part:

"The romantic side of the telephone business is not all on the side of the men who climb poles or the women who stick to their switchboards until floor or fire cut them off from outside communication. Upon the twelfth floor of the American Telephone and Telegraph Company building at 165 Broadway men sit behind mahogany desks six days a week directing swift maneuvers against the hordes of unscrupulous schemers, who at times become so bold as to attach the lines of contact between this gigantic company and the thousands of investors who hold its stock.

Refused Transfer

A typical example of how the Bell Telephone Securities forces go out of their way to protect the parent company's stockholders is presented in the case of a Pennsylvania clergyman who put his slowly acquired savings into American Telephone stock. The Bell people were appealed to as a last recourse a short time ago to recover the stock certificate, craftily taken from the guileless owner.

A voice on the New York end of a telephone line reaching into the clergyman's study informed him that the speaker, an old friend, was sorely in need of funds to tide him over an emergency. The Pennsylvania man offered to send his friend his only resources the certifiactes for thirty-five shares of telephone stock. The New York voice was agreeable and offered to expedite matters by having an acquaintance who "happened" to be in a nearby Pennsylvania town call for the indorsed certificate.

A few days later the stockholder learned that it was not his New York friend who had appealed for aid. He had been duped into handing his certificate in transferable form over to a stranger. The clergyman communicated with the American Telephone and Telegraph Company and asked to have transfer of the certificate refused. The Bell Telephone Securities Company did more than that. It traced the certificate to New York and confronted the plotters.

Creates Good Will

This and other cases have been handeld in such a way as to convince the scheming gentry that telephone stock certificates have something more than earning power in back of them. They have been made to understand that there are more profitable and healthy fields for their operations. Thus it is that the American Telephone and Telegraph Company's stock, greater in volume and more widely distributed than that of any other company, is practically immune from the attacks of schemers.

Employees Sales

From a security formerly regarded as something only for the Northeast to hold, American Telephone and Telegraph stock has become a national investment, largely through the efforts of employees. The thing that has appealed greatly is the monthly payment plan wherein the company agrees to buy stock in the market at current prices and at a commission of 25 cents a share, open an account for the investor and permit him to pay $10 a share a month. The buyer gets 6 per cent interest on his credits. The records of the Bell Telephone Securities Company show that of the 700,000 odd shares of American Telephone stock sold on the Stock Exchange last year 37 per cent represented shares bought by the Bell Securities for individuals.

What the company gets in return for its trouble and expense is an ever-increasing share of the public's good will. The plan is also recognized as a strong argument against bolshevism if there is such a thing in this country."

Boost your own town paper.

SO BIG

By EDNA FERBER

(©, Doubleday, Page & Co.)
WNU Service.

CHAPTER XI—Continued

—14—

"No," Selina admitted, "but those Italian villas and French chateaux in north Chicago suburbs are a good deal like a lace evening gown in the Arizona desert. It wouldn't keep you cool in the daytime, and it wouldn't be warm enough at night. I suppose a native architecture is evolved from building for the local climate and the needs of the community, keeping beauty in mind as you go. We don't need turrets and towers any more than we need draw-bridges and moats. It's all right to keep them, I suppose, where they grew up, in a country where the feudal system meant that any day your next-door neighbor might take it into his head to call his gang around him and sneak up to steal your wife and tapestries and gold drinking cups."

Dirk was interested and amused. Talks with his mother were likely to affect him thus. "What's your idea of a real Chicago house, mother?"

Selina answered quickly, as if she had thought often about it; as if she would have liked just such a dwelling on the site of the old DeJong farmhouse in which they now were seated so comfortably. "Well, it would need big porches for the hot days and nights so's to catch the prevailing southwest winds from the prairies in the summer—a porch that would be swung clear around to the east, too—or a terrace or another porch east so that if the precious old lake breeze should come up just when you think you're dying of the heat, as it sometimes does, you could catch that, too. It ought to be built—the house, I mean—rather squarish and tight and solid against our cold winters and northeasters. Then sleeping porches, of course. There's a grand American institution for you! England may have its afternoon tea on the terrace, and Spain may have its patio, and France its courtyard, and Italy its pergola, vine-covered; but America's got the sleeping porch—the screened-in open-air sleeping porch, and I shouldn't wonder if the man who first thought of that would get precedence, on Judgment day, over the men who invented the airplane, the talking machine, and the telephone. After all, he had nothing in mind but the health of the human race." After which grand period Selina grinned at Dirk, and Dirk grinned at Selina and the two giggled together there by the fireplace, companionably.

"Mother, you're simply wonderful!—only your native Chicago dwelling seems to be mostly porch."

Selina waved such carping criticism away with a careless hand. "Oh, well, any house that has enough porches, and two or three bathrooms and at least eight closets can be lived in comfortably, no matter what else it has or hasn't got."

Next day they were more serious. The eastern college and the architectural career seemed to be settled things. Selina was content, happy. Dirk was troubled about the expense. He spoke of it at breakfast next morning (Dirk's breakfast; his mother had had hers hours before and now as he drank his coffee, was sitting with him a moment and glancing at the paper that had come in the rural mail delivery). She had been out in the fields overseeing the transplanting of young tomato seedlings from hotbed to field. She wore an old gray sweater buttoned up tight, for the air was still sharp. On her head was a battered black felt soft hat (an old one of Dirk's) much like the one she had worn to the Haymarket that day ten years ago.

"I've been thinking," he began, "the expense—"

"Pigs'll do it," Selina said, calmly. "I've been wanting to put them in for three or four years. It's August Hempel's idea. Hogs, I should have said."

He echoed, "Hogs!" rather faintly.

"High-bred hogs. They're worth their weight in silver this minute, and will be for years to come. I won't go in for them extensively. Just enough to make an architect out of Mr. Dirk DeJong." Then, at the expression in his face: "Don't look so pained, son. There's nothing revolting about a hog—he's a handsome, impressive-looking animal, the hog, when he isn't treated like one."

He looked dejected. "I'd rather not go to school on—hogs."

She took off the felt hat and tossed it over to the old couch by the window; smoothed her hair back with the flat of her palm. You saw that the soft dark hair was liberally sprinkled with gray now, but the eyes were bright and clear as ever.

"You know, Sobig, this is what they call a paying farm—as vegetable farms go. We're out of debt, the land's in good shape, the crop promises well if we don't have another rainy cold spring like last year's. I'm having a grand time. When I see the asparagus plantation actually yielding, that I planted ten years ago, I'm as happy as if I'd stumbled on a gold mine. I think, sometimes, of the way your father objected to my planting the first one. April, like this, in the country, with everything coming up green and new in the rich black loam—I can't tell you. And when I know that it goes to market as food—the best kind of food, that keeps people's bodies clean and clear and flexible and strong! I like to think of babies' mothers saying: 'Now eat your spinach, every scrap, or you can't have any dessert! . . . Carrots make your eyes bright. . . . Finish your potato. Potatoes make you strong!'"

Selina laughed, flushed a little.

"Yes, but how about hogs? Do you feel that way about hogs?"

"Certainly," said Selina, briskly. She pushed toward him a little blue-and-white platter that lay on the white cloth near her elbow. "Have a bit more bacon, Dirk. One of these nice curly slivers that are so crisp."

"I've finished my breakfast, Mother." He rose.

The following autumn saw him a student of architecture at Cornell. He worked hard, studied even during his vacation.

He would come home to the heat and humidity of the Illinois summers and spend hours each day in his own room that he had fitted up with a long work-table and a drawing board. His T-square was at hand; two triangles—a 45 and a 60; his compass; a pair of dividers. Selina sometimes stood behind him watching him as he carefully worked on the tracing paper. His contempt for the local architecture was now complete. Especially did he hold forth on the subject of the apartment houses that were mushrooming on every street in Chicago from Hyde Park on the south to Evanston on the north. Chicago was very elegant in speaking of these; never called them "flats"; always apartments. In front of each of these (there were usually six to a building) was stuck a little glass-enclosed cubicle known as a sun-parlor. In these (sometimes you heard them spoken of, grandly, as solariums) Chicago dwellers took refuge from the leaden skies, the heavy lake atmosphere, the gray mist and fog and smoke that so frequently swathed the city in gloom. They were done in yellow or rose cretonnes. Silk lampshades glowed therein, and flower-laden boxes. In these frank little boxes Chicago read its paper, sewed, played bridge, even ate its breakfast. It never pulled down the shades.

"Terrible!" Dirk fumed. "Not only are they hideous in themselves, stuck on the front of those houses like three pairs of spectacles; but the lack of decent privacy! They do everything but bathe in 'em. Have they never heard the advice given people who live in glass houses!"

By his junior year he was talking in a large way about the Beaux Arts. But Selina did not laugh at this. "Perhaps," she thought. "Who can tell! After a year or two in an office here, why not another year of study in Paris if he needs it."

Though it was her busiest time on the farm Selina went to Ithaca for his graduation in 1913. He was twenty-two and, she was calmly sure, the best-looking man in his class. Undeniably he was a figure to please the eye; tall, well-built, as his father had been, and blond, too, like his father, except for his eyes. These were brown—not so dark as Selina's, but with some of the soft liquid quality of her glance. They strengthened his face, somehow; gave him an ardent look of which he was not conscious. Women, feeling the ardor of that dark glance turned upon them, were likely to credit him with feelings toward themselves of which he was quite innocent. They did not know that the glance and its effect were mere matters of pigmentation and eye-conformation. Then, too, the gaze of a man who talks little is always more effective than that of one who is loquacious.

Selina, in her black silk dress, and her plain black hat, and her sensible shoes, was rather a quaint little figure among all those vivacious, bevoiled, and beribboned mammas. But a distinctive little figure, too. Dirk need not be ashamed of her. She eyed the rather paunchy, prosperous, middle-aged fathers and thought, with a pang, how much handsomer Pervus would have been than any of these, if only he could have lived to see this day. Then, involuntarily, she wondered if this day would ever have occurred, had Pervus lived. Chided herself for thinking thus.

When he returned to Chicago, Dirk went into the office of Hollis & Sprague, architects. But his work there was little more than that of draughtsman, and his weekly stipend could hardly be dignified by the term of salary. But he had large ideas about architecture and he found expression for his suppressed feelings on his week-ends spent with Selina at the farm.

"Baroque" was the word with which he dismissed the new Beachside hotel, north. He said the new Lincoln park bandstand looked like an igloo. He said that the city council ought to order the Potter Palmer mansion destroyed as a blot on the landscape, and waxed profane on the subject of the east face of the Public Library building, downtown.

"Never mind," Selina assured him, happily. "It was all thrown up so hastily. Remember that just yesterday, or the day before, Chicago was an Indian fort, with tepees where towers are now, and mud wallows in place of asphalt. Beauty needs time to perfect it. Perhaps we've been waiting all these years for just such youngsters as you. And maybe some day I'll be driving down Michigan boulevard with a distinguished visitor—Roelf Pool, perhaps. Why not? Let's say Roelf Pool, the famous sculptor. And he'll say, 'Who designed that building—the one that is so strong and yet so light? So gay and graceful and yet so reticent!' And I'll say, 'Oh, that! That's one of the earlier efforts of my son, Dirk DeJong.'"

But Dirk pulled at his pipe moodily; shook his head. "Oh, you don't know, mother. It's so d—d slow. First thing you know I'll be thirty. And what am I! An office boy—or little more than that—at Hollis'."

During his university years Dirk had seen much of the Arnolds, Eugene and Paula, but it sometimes seemed to Selina that he avoided these meetings—these parties and week-ends. She was content that this should be so, for she guessed that the matter of money held him back. She thought it was well that he should realize the difference now. Eugene had his own car—one of five in the Arnold garage. Paula, too, had hers. Her fascination for Dirk was strong. Selina knew that, too. In the last year or two he had talked very little of Paula and that, Selina knew, meant that he was hard hit.

Sometimes Paula and Eugene drove out to the farm. Eugene would appear in rakish cap, loose London knickers, queer brogans with an English look about them, a carefully careless looseness about the hang and fit of his jacket. Paula did not affect sports clothes for herself. She was not the type, she said. Slim, dark, vivacious, she wore slinky clothes—crepes, chiffons. Her eyes were languorous, lovely. She worshiped luxury and said so.

"I'll have to marry money," she declared. "Now that they've finished calling poor grandpa a beef-baron and

"You Like Me Better Than Any Man You Know."

taken I don't know how many millions away from him, we're practically on the streets."

"You look it!" from Dirk; and there was bitterness beneath his light tone.

"Well, it's true. All this silly muckraking in the past ten years or more. Poor father! Of course, granddad was pur-ty rough, let me tell you. I read some of the accounts of that last indictment—the 1910 one—and I must say I gathered that dear old Aug made Jesse James look like a philanthropist. I should think, at his age, he'd be a little scared. After all, when you're over seventy you're likely to have some doubts and fears about punishment in the next world. But not a grand old pirate like grandfather. He'll sack and burn and plunder until he goes down with the ship. And it looks to me as if the old boat had a pretty strong list to starboard right now. Father says himself that unless a war breaks, or something, which isn't at all likely, the packing industry is going to spring a leak."

"Elaborate figure of speech," murmured Eugene. The four of them—Paula, Dirk, Eugene and Selina—were sitting on the wide screened porch that Selina had had built at the southwest corner of the house. Paula was, of course, in the couch-swing. Occasionally she touched one slim languid foot to the floor and gave indolent impetus to the couch.

"It is, rather, isn't it? Might as well finish it, then. Darling Aug's been the grand old captain right through the village. Dad's never been more than a pretty bum second mate. And as for you, Gene my love, cabin boy would be, y'understand me, big." Eugene had gone into the business a year before.

"What can you expect," retorted Eugene, "of a lad that hates salt pork? And every other kind of pig meat?" He despised the yards and all that went with it.

Selina got up and walked to the end of the porch. "There's Adam coming in with the last load for the day. He'll be driving into town now. Cornelius started an hour ago." She went down the steps on her way to oversee the loading of Adam Bras' wagon. At the bottom of the steps she turned. "Why can't you two stay to supper? You can quarrel comfortably right through the meal and drive home in the cool of the evening."

"I'll stay," said Paula, "thanks. If you'll have all kinds of vegetables, cooked and uncooked. And let me go out into the fields and pick 'em myself like Maud Muller or Marie Antoinette or any of those make-believe rustic gals."

In her French-heeled slippers and her filmy silk stockings she went out into the rich black furrows of the fields, Dirk carrying the basket.

"Asparagus," she ordered first. Then, "But where is it? Is that it!"

"You dig for it, idiot," said Dirk, stooping, and taking from his basket the queerly curved sharp knife or spud used for cutting the asparagus shoots. "Cut the shoots three or four inches below the surface."

"Oh, let me do it!" She was down on her silken knees in the dirt, ruined a goodly patch of the fine, tender shoots, gave it up and sat watching Dirk's expert manipulation of the knife. "Let's have radishes, and corn, and tomatoes and lettuce and peas and artichokes and—"

"Artichokes grow in California, not Illinois."

He was more than usually uncommunicative, and noticeably moody.

Paula remarked it. "Why the Othello brow?"

"You didn't mean that rot, did you? about marrying a rich man. You were joking, weren't you?"

"I wasn't. I'd hate being poor, or even just moderately rich. I'm used to money—loads of it. I'm twenty-four. And I'm looking around."

He kicked an innocent beet-top with his boot. "You like me better than any man you know."

"Of course I do. Just my luck."

"Well, then!"

"Well, then, let's take these weggibles in."

She made a pretense of lifting the heavy basket. Dirk snatched it roughly out of her hand so that she gave a little cry and looked ruefully down at the red mark on her palm. He caught her by the shoulder—even shook her a little. "Look here, Paula. Do you mean to tell me you'd marry a man simply because he happened to have a lot of money!"

"Perhaps not simply because he had a lot of money. But it certainly would be a factor, among other things."

Six months later Paula Arnold was married to Theodore A. Storm, a man of fifty, a friend of her father's, head of so many companies, stockholder in so many banks, director of so many corporations that even old Aug Hempel seemed a recluse from business in comparison. She never called him Teddy. No one ever did. Theodore Storm was a large man—not exactly stout, perhaps, but flabby. His inches saved him from grossness. He had a large white serious face, fine thick dark hair, graying at the temples. Within three years Paula had two children, a boy and a girl. "There! That's done," she said. Her marriage was a great mistake and she knew it. For the war, coming in 1914, a few months after her wedding, sent the Hempel-Arnold interests sky-rocketing. Millions of pounds of American beef and pork were shipped to Europe. In two years the Hempel fortune was greater than it ever had been. Paula was up to her eyes in relief work for Bleeding Belgium.

Dirk had not seen her in months. She telephoned him unexpectedly one Friday afternoon in his office at Hollis & Sprague's.

"Come out and spend Saturday and Sunday with us, won't you? We're running away to the country this afternoon. I'm so sick of Bleeding Belgium, you can't imagine. I'm sending the children out this morning. I can't get away so early. I'll call for you in the roadster this afternoon at four and drive you out myself."

"I don't think I—"

"I'll call for you at four. I'll be at the curb. Don't keep me waiting, wi'l you?"

(TO BE CONTINUED.)

Charcoal

Charcoal is the form of amorphous carbon obtained by strongly heating wood. If required for fuel it can be obtained by the partial combustion of wood in heaps. The wood, cut into convenient and uniform lengths, is systematically piled in a mound-shaped heap with provision made for draft. The mound is covered with earth, except a small opening at the top. This is a charcoal kiln. When completed it is fired, and by means of slow combustion the wood is converted into charcoal, which is usually almost dead black in color and much lighter in weight than wood. That is the old way of producing charcoal.

Alaskan "Dog Car"

Almost every conceivable type of transportation is used to move the mails—railroads, steamboats, automobiles, airplanes, motor boats, wagons, horses, pneumatic tubes, belt conveyors, motorcycles, bicycles, the sled of the arctic, and even the "dog car," the Detroit News says.

The "dog car" is an Alaskan invention. An abandoned railroad runs out of Nome to a mining camp. The enterprising arctic circle mail man hitches his dog team to a hand car and scoots up the mountain side with the post.

Reflex Sets Are Very Clear, Loud

Radio Frequency and Audio Frequency Transformers Important.

For loud-speaker reception with the minimum original outlay and upkeep expense, the reflex type of receiver is most suitable. Reflex sets are very clear and loud in their reproduction and have a good receiving range.

The critical units in a reflex set are the radio frequency and audio frequency transformers. Only the best should be used.

The crystal detector should be the adjustable type. Fixed types lose efficiency with use.

Parts You Will Need.

The parts required are as follows:

One antenna coupler.

One .0005 variable condenser (about twenty-three plates and of low-loss construction).

One radio frequency transformer (preferably of the reflex type).

One crystal detector.

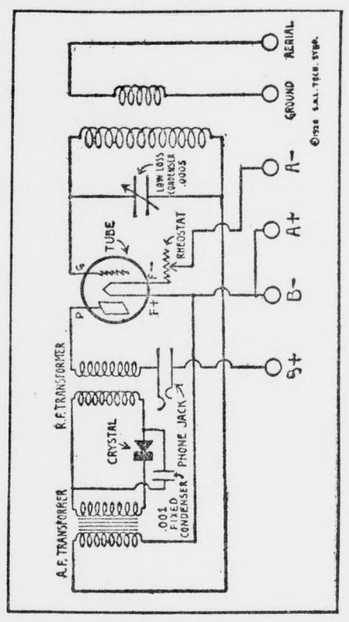

Wiring Diagram.

One 25-ohm rheostat.

One socket.

One seven by nine panel.

Two fixed condensers (one .001 and one .002).

One single-circuit jack.

Baseboard screws, wire, binding posts, etc.

A little added expense in buying exceptionally good material is money well spent.

The best all-round tube for reflex work is the UV201-A, or C301-A.

From 45 to 90 volts of "B" battery should be used with this receiver. Either a six-volt storage battery or four dry cells connected in series can be used for the "A" battery.

The antenna tuner uses the familiar aperiodic primary coupler. It consists of two windings on a three-inch bakelite tube. One is of eight turns and the other of forty-five. Use No. 22 d.c.c wire. The eight-turn coil should be loosely wound on top of the forty-five turns so that it can be slid back and forth until the correct degree of selectivity is obtained.

Although not shown in the diagram, the phone jack should be shunted with a .005 mfd. fixed condenser to by-pass the radio frequency currents.

Perfect Contact for Rotor Shaft Bearings

Where pigtails are not used and a brush or bearing contact makes the connection for rotors, considerable scratching will be heard when the rotor is turned. To make a good contact for such a bearing, writes a correspondent in Radio Digest, I used the method as shown. A wire is run between the bolts holding the shaft bearing, the wire being given three turns around the shaft and drawn tight. The wire grips the shaft as it is revolved.

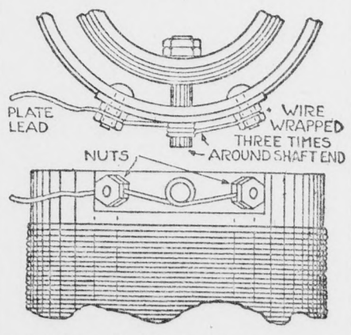

ETHER WAVES

Use good insulators and solder all connections. The lower the resistance, the stronger the signals.

Radio relaying, whether conducted by means of land wires or radio, is a question of satisfactory signal strength, minimum distortion of the signal, and the minimizing of atmospheric and other parasitic disturbances.

Night cruises of the giant airplane R-33 are interesting to English radio fans, because they can hear the operator talking to various land stations giving position reports. The wave length is 900 meters, and is clearly heard on crystal detector sets.

Grow Hair on Your BALD HEAD

BARE-TO-HAIR
A Blessing to Mankind

Paul Bonor, Pitcairn Ave., Jeannette, Pa., had Alopecia, which left him without hair on any part of his head. Used four bottles of Bare-to-Hair. Now has a full growth of hair as shown on the photo. Bare-to-Hair will grow hair on bald heads, Stop Falling Hair, Dandruff, Itching, and many forms of Eczema.

Correspondence given personal attention.

Beckel, Cordy & Hutchinson
DISTRIBUTORS
115 Mason St. San Francisco, Calif

Kremola
for the Perfection of Your Complexion
This pure snow-white cream removes all discolorations, blemishes, patches, pimples, etc., and produces a soft skin and creamy complexion. At drug or dept. stores or by mail prepaid, $1.25. Send for free Beauty Booklet. Agents wanted.
DR. C. H. BERRY CO., 2975 Michigan Ave., CHICAGO

SAVE YOUR EYES!
Use Dr. Thompson's Eyewater. Buy at your druggist's or 1167 River, Troy, N. Y. Booklet.

MORTON HOMELIKE
REASONABLE HOSPITAL
Our expert doctors and surgeons, excellent food, and quiet surroundings bring you real health.
1055 PINE ST., SAN FRANCISCO, CALIF.

Green's August Flower
for Constipation, Indigestion and Torpid Liver
Successful for 59 years.
30c and 90c bottles—
ALL DRUGGISTS

What Appealed to Him

Mr. James Caldwell, formerly deputy of the British house of commons, who died in London recently, was a privy councilor and held other high honors; but he was above all things a Scot. On one occasion during the later eighties he attended one of those typically Victorian functions, a garden party at Windsor castle. Driving back to London with another M. P., the latter observed to the then young and enthusiastic Glaswegian: "Marvelous old place, Windsor castle, a complete epitome of English history." "Yes, indeed," agreed Caldwell; "did you notice the gold key that her majesty used to open the Glasgow waterworks in 1859?"

Watch Cuticura Improve Your Skin. On rising and retiring gently smear the face with Cuticura Ointment. Wash off Ointment in five minutes with Cuticura Soap and hot water. It is wonderful what Cuticura will do for poor complexions, dandruff, itching and red, rough hands.—Advertisement.

Mothers' Day Founder?

Though the Mothers' Day International association stoutly claims that its president, Miss Anna Jarvis of Philadelphia, originated Mothers' day, the American War Mothers have proclaimed Frank Hering of South Bend as the "father" of Mothers' day. They insist he agitated such an observance as far back as 1902. Others claim the idea started with Robert Cummins, Baltimore Sunday school superintendent.

For bloated feeling and distressed breathing due to indigestion you need a medicine as well as a purgative. Wright's Indian Vegetable Pills are both. Adv.

The Order of the Bath

William M. Jardine, secretary of agriculture, said at a Washington reception:

"A secretary of agriculture isn't much good if he doesn't understand his job. Some secretaries remind me of the boy in the history class:

"'Describe the Order of the Bath,' the history teacher said.

"And the boy gulped and answered:

"'It's very ancient, and goes back to the times when they didn't take no baths except by order.'"

Science Wars on Pests

Bad table manners and loud chewing are the undoing of certain insects and grubs inhabiting sacks of peanuts imported from the Orient. Their noisy champing, intensified by means of a newly invented microphone, enables the customs service and pure food bureau officials to detect their presence. The new apparatus is also useful in detecting insect pests in fruit and stored grain.

Don't let baby be tortured by skin trouble! Apply Resinol Ointment and see how quickly the itching and burning stops

Resinol

W. N. U., San Francisco, No. 26--1925.

MENLO PARK RECORDER

HARRIS & ELY, PUBLISHERS

H. E. HARRIS ..... Editor
STELLA E. ELY ..... Associate Editor

Published every Saturday at Menlo Park, San Mateo County, California.

Entered as second-class mail matter, Act of October 3, 1917, Section 1104, at the Postoffice at Menlo Park, California.

SUBSCRIPTION RATES

Three Months.....75c Six Months.....$1.00 One Year.....$1.75

SATURDAY, JUNE 27, 1925

NO TREES TO BURN

Big industries are not interested only in things which touch their own company but seek to promote any idea which makes for a bigger and better country. This is aptly illustated by the following editorial which the Mountain States Telephone & Telegraph Company ran in the June issue of its monthly publication, "The Monitor," under the heading, "No Trees to Burn."

"Each person who goes into a national forest to enjoy the shade, the streams, the quiet and peace of 'God's first temples' should constitute himself a committee of one on prevention of the destruction of our trees. The American public is one of he greatest offenders in forest destruction because of its carelessness with fire.

"Matches are kept away from small children who have no sense of responsibility. This should not be necessary in the case of adults. One tree will make millions of matches, and one match can destroy a million dollars' worth of trees. The future of our nation depends largely upon a lasting supply of timber.

"We have no trees to burn."

ADVICE TO BROADCAST LISTENERS

Here are ten good rules for broadcast listeners:

1.—Don't try to hear ordinary broadcasting from Australia in midsummer.

2.—Don't be disappointed if an occasional storm interferes with your radio evening. You can't find a pearl in every oyster nor receive a record-breaking concert every night.

3.—If you want louder signals, use a longer aerial, more tubes, higher plate voltage, more sensitive loudspeakers and more careful tickler and receiver adjustment.

4.—A pleasant signal filling a moderate size room should be enough to give satisfaction. Musically, such a signal is ideal. It is wasteful to insist on tremendous signals which are generally less pleasant than moderate signals.

5.—If a local station drowns others out, a smaller aerial will help in tuning him out, with a smaller condenser connected between aerial and ground. And if all measures to get rid of the local station fail, why not enjoy his concerts? He is working hard for you. Broadcast stations have to be closer to some people than to others.

6.—For the longer waves above 450 meters, use a condenser connected between the aerial and ground terminals of your set.

7.—A little patience in learning to handle your receiver yields rich returns in satisfaction from fine signals.

8.—Read the radio column of a newspaper or a good radio magazine or two. It helps you to know how your set works and keeps you up-to-date in radio.

9.—Ask your radio dealer or manfacturer for advice; he will be glad to help you.

10.—Keep direction sheets or instructions. They answer most of the questions which have been puzzling you and preventing you from getting the best out of your set.

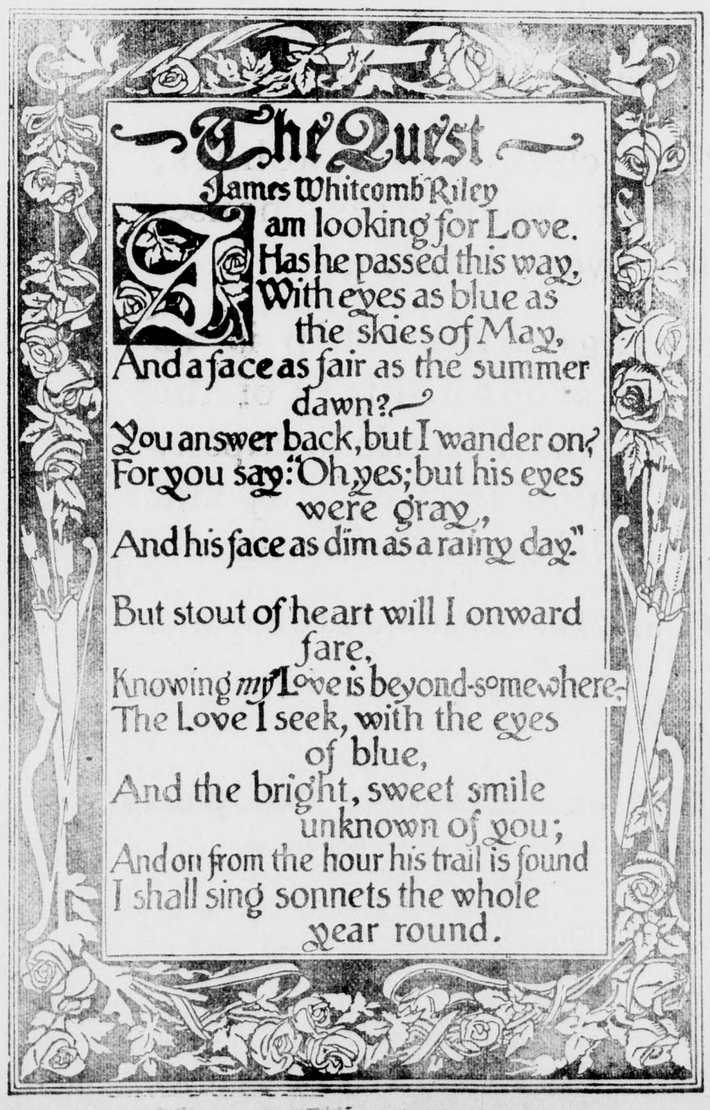

SAFETY ELECTRIC WORKS
PHONE 2151

Kennedy Radio

"The Royalty of Radio"

5 Tube Set, not equipped.....$125.00
4 Tube Set, not equipped..... 87.50
3 Tube Set, not equipped.....75.00

ATTRACTIVE TERMS

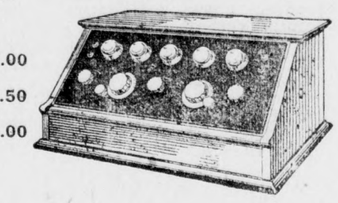

Safety Electric Works

L. H. COOK, Proprietor

Phone Palo Alto 2151 Highway, Menlo Park

FRANK E. CAINE

Real Estate and Insurance

THE BEST PROPERTIES ON THE PENINSULA LISTED

PHONE PALO ALTO 2011

On the Highway Menlo Park

Dudfield Lumber Company

PALO ALTO

Lumber and Mill Work

The Largest Building Material Concern on the Peninsula

MAIN OFFICE AND YARD:
COR. ALMA ST. AND FOREST AVE.
PHONE P. A. 21 and 22
PLAINING MILL PHONE P. A. 225

HARD ICE

Means REFRIGERATION
REFRIGERATION Means A Saving of Food and Money

KEEP YOUR ICE BOX FULL AT ALL TIMES—
IT IS THE SAFEST AND CHEAPEST PROTECTION

FOR DELIVERY
PHONE MENLO PARK 290 or REDWOOD 155
YOUR CASH AND CARRY STATION IS LOCATED AT
THE LITTLE GREEN DOOR on the Highway

MENLO PARK ICE DELIVERY

Main Office: REDWOOD ICE DELIVERY Redwood City.
PAUL X. SMITH, Manager.

Menlo Park Dyeing and Cleaning Works

Phone P. A. 1008

WE CALL FOR AND DELIVER WORK

ALL WORK GUARANTEED AND PRICES ARE REASONABLE

Highway Menlo Park, Cal.

TRY OUR WANT ADS. WILL IT PAY YOU.

They Get Results

Adventures in Non-sense

By THOMAS J. GLYNN

(W)RIGHT OUT-WEIGHTED (W)RONG

Jacob Wright and Lester Rong
Were friends, not long agao,
'Til they got in an argument
As to how fast is slow.

Now, Wright said that a thing was slow
When half the speed of fast.
But, Rong said "No" it wasn't slow
'Till first came in the last.

"I'm right," said Rong, "you're wrong."
"You're Rong," said Wright, "I'm Wright,
How could a Wright be wrong
When Wright writes right with might?"

"You might be Wright," said Rong,
"But wrong you are by right."
"Well then," said Wright, "to prove
That Wright is right we'll fight."

Casper Out, a mutual friend
Served as the referee,
And they slung blows in wild array,
But, never hit you see.

'Till finally by accident
Wright hit Rong on the nose,
And he went down and it was long
Before, again he rose.

The referee raised Wright's right arm
Said he: "Wright wins the bout,
And Rong is down, as wrong should be,
But it is I am OUT.

And what is so rare as a maiden with long hair?

Peddler:—"If you take this medicine, people will never have to ask you about your health."

Victim:—"I don't doubt it. One rarely asks after the health of a dead person?

Some stamps don't know when they're licked. And, now, we might reverse the idiom and remark that you can't keep a bum stamp down.

Some folks are so dumb they think a horse fly is an insect with a sore throat.

Horses are going out of style—people soon won't have any excuse for being bow-legged.

Next week—A play in one AX—"Nothing to Lean On."

Often Heard But Seldom Seen.

A person who laughed himself to death.

Someone in the middle of next week.

An alarm clock that fails to go off, when you want to sleep.

A man who owes all his success to his wife.

An automobile tire that doesn't puncture or blow out.

Mars.

A rich person who wishes he were poor again.

A "17" year-old chorus girl.

The North Pole.

Varsity Theatre

University Avenue, Palo Alto

Sunday and Monday, June 28 and 29

HOOT GIBSON

in Henry Herbert Knibbs'

"THE RIDIN' KID FROM POWDER RIVER"

A real dyed-in-the-wool adventure drama with the greatest star that ever bused a buckin' broncho!

"DANGEROUS CURVES"—
A Sunshine Comedy
FOX VARIETY

TUESDAY and WEDNESDAY, June 30 and July 1

GEORGE BEBAN in "The Greatest Love of All"

George Beban makes only one picture a year, with the result that each of his productions is a Finished, flawless creation. "The Greatest Love of All" is the finest thing he has ever done.

"TWINS", A Stan Laurel Comedy.
BRAY MAGAZINE

THURSDAY, FRIDAY, SATURDAY, July 2, 3 and 4

Charles Ray, Charlie Murray, Betty Blythe and Barbara Bedford in—

"PERCY"

A gay, sparkling comedy romance peopled by the most fascinating folks you ever met! An adaptation of William H. Hamby's novel "The Desert Fiddler."

"The Race," A Van Bibber Comedy
KINOGRAMS NEWS

BUYING THE CAR WITH YOUR VACATION FUNDS

"A lot of people are buying a car this year with their vacation money—and still having a better vacation than ever" says Phil Miebach of the Palo Alto Garage, Palo Alto.

"As a matter of fact, the sum usually spent by the ordinary family for vacations will buy a good car. It is equally true that all one needs for a bang-up vacation is a dependable automobile. The operating cost is nominal, and auto tourist accommodations are everywhere obtainable at very low cost.

"A party of four or five can have a fine long auto trip—a vacation replete—for little more than the cost of staying at home.

"And the money that the vacation would otherwise cost will make at least a substantial payment on any car the family wants."

Mr. and Mrs. C. R. Walter and family left Thursday for Lake Tahoe where they will spend the summer.

Reports from the bedside of Mrs. I. Miller who underwent a serious operation in St. Mary's Hospital, San Francisco, last week are encouraging although it will be some time before the patient can return home.

The New Stanford

THEATRE

UNIVERSITY AVENUE PALO ALTO

SUNDAY and MONDAY, JUNE 28 and 29

Doris Kenyon-Milton Sills —IN— "I Want My Man

Two Great Stars in a Mighty Drama

Is it ever too late for love to come back? Can you win over again the woman whose love you have lost? You can learn about life and love from this stirring drama.

Comedy—"WHAT PRICE GOOFY"

PATHE NEWS REVIEW

TUESDAY, WEDNESDAY, THURSDAY, JUNE 30, JULY 1 and 2

"ARE PARENTS PEOPLE"

ADOLPHE MENJOU as The Father, BETTY BRONSON as The Daughter, FLORENCE VIDOR as The Mother. Are fathers flirts? Are mothers merry makers? See the answers in this delightful comedy of marriage written by Alice Duer Miller, author of "Manslaughter." Played by a perfect cast.

Comedy, "SURE MIKE" SPORTLIGHT KINOGRAMS

FAMOUS KIRKSMITH SISTERS in a delightful Musical Program.

FRIDAY and SATURDAY, JULY 3 and 4

"FRIENDLY ENEMIES" with Weber & Fields

And FAMOUS KIRKSMITH SISTERS in an entirely new Program.

Our Gang Comedy—"CIRCUS FEVER"

NEWS TOPICS OF THE DAY

PROGRAM SUBJECT TO CHANGE

Pictures may be transferred or Stage Presentation may be Added.

COMING—"THE DIXIE HANDICAP" with Claire Windsor, Lloyd Hughes, Otis Harlan, Frank Keenan and John Sainpolis.

COMING—THOMAS MEIGHAN in "OLD HOME WEEK"

CANADIAN IMPORT REGULATIONS EXPLAINED BY ASSN.

Thousands of California motorists who are planning trips this summer into the Pacific Northwest and British Columbia will save themselves much inconvenience and possibly some expense by carefully complying with the Ganadian customs regulations, according to George S. Grant manager of the touring bureau of the California State Automobile Association.

Wearing apparel, articles of personal adornment, toilet articles and similar personal effects of persons arriving in Canada are passed free as travelers' baggage without entry at the customs office, but this provision is limited to such articles as are in use by travelers and necessary and appropriate for their wear and use for the immediate purpose and convenience of the journey, and does not include merchandise or articles intended for other persons or for sale, according to Grant.

In addition to travelers' baggage, persons visiting Canada for a limited period may take with them such guns, fishing tackle, canoes, camping equipment, musical instruments, cameras, etc., as they require for their own use while in Canada, by reporting the same to the customs officer at the port of entry and depositing with him a sum of money equal to the duty on such articles.

The money thus deposited will be refunded if the articles are exported from Canada and identified at the customs port where imported or at another port within six months from the time of entry. The articles must be produced and their identity attested to before a Canadian customs officer at the place of export or before a customs officer at a place outside of Canada.

Tourists must furnish the customs officer at the port of entry with a report or invoice of their outfits in duplicate, one copy of which is returned to the tourist when signed by the customs officer with the amount deposited marked thereon. If exportation is not effected within six months the money deposited will be applied as duty.

MENLO PARK FIRE HOUSE Phone 888

Stanford Calendar

Saturday, June 27

10 a. m.—Excursion to Halfmoon Bay and La Honda, starting from the main entrance, Stanford Union. Return about 4 p. m. Auto fare $2.50.

Sunday, June 28

11 a. m.—Divine Worship and sermon.

4 p. m.—Organ recital by Mr. Allen in the Church.

Tuesday, June 30

4:15 p .m.—Organ Recital, by Mr. Allen in the Church.

8 p. m.—Lecture by Professor Jos. Alexander Leighton of Ohio State University, Acting Professor of Philosophy; in the Little Theatre.

Wednesday July 1

4:15 p .m.—Lecture on Dante's "Divine Comedy," by Professor O. M. Johnston of the Department of Romanic Languages; in the Little Theatre.

Thursday, July 2

4:15 p. m.—Organ Recital, by Mr. Allen, in the Churcn.

7:30 p. m.—Thursday evening conference, at the home of Dr. David Starr Jordan. Subject: "Virginia in the Civil War."

Friday, July 3

8:30 p. m.—Outdoor Concert, in the Court of the Stanford Union.

Saturday, July 4

8 p. m.—Roble-at-Home to all summer quarter students.

PRESBYTERIAN CHURCH

Sunday School at 10:00 a. m.

Preaching services at 11:00 a. m.

Christian Endeavor Society meets at 7:00 p. m.

The church is located on Santa Cruz avenue near the Highway and a cordial invitation is extended to the public to attend all of these services.

Pastor's residence, 1855 Cowper street, Palo Atlo, phone Palo Alto 1095.

H. W. HARBAUGH, Pastor.

REMEMBER—That The Menlo Park Recorder is your paper and that we are glad to receive news items of interest to the public at all imes. We are as near as your phone. Call up 268-J and we will do the rest.

The Month's Best Funny Stories

(From July Smart Set)

It was a dear old lady's first ride in a taxi, and she watched with glowing alarm the driver constantly putting his hand outside the car as a signal to the following traffic. At last she became angry, and said:

"Young man, you look after that car of yours, and watch where you are going; I'll tell you when it starts raining."

* * *

A young couple had just been presented with a baby, and owed a large doctor bill. One night the husband came home very tired, and said, "I paid some more on the doctor bill today."

The mother exclaimed, "Oh just think! Only two more payments and the baby will be ours."

* * *

An old negro woman was hit by an automobile. While on the way to the hospital, she began to rave and holler. The doctor tried to soothe her.

"Don't get excited, Mammy; you have the best chances in the world for damages."

The old lady looked at him with anger and said, "Damages! Damages! Good Lord, man, I got damages enough. What I needs is a few repairs."

* * *

A San Francisco lady was training a new and inexperienced Chinese houseboy, and among other things found it necessary to teach him to receive a caller.

"Now, Wing," she said, "when I come home this afternoon I shall ring the bell, and you must pay attention to what I tell you to do when you open the door."

When the boy did this on her return, she handed him her visiting card and had him show her into the drawing room. Soon after, a real caller appeared. Wing took the proffered bit of pasteboard and gravely compared it with his mistress' card, which he produced from his sleeve. After looking at the two for a moment, he ren a [illegible]:

"Tickee no samee; no can come in."

DR. RAYMOND CASTLE
DENTIST
Highway, near Santa Cruz Ave.
MENLO PARK CAL.

FINE RECORD MADE BY STAR CAR ON STEEP GRADES

Indisputably demonstrating the power of the "MILLION DOLLAR MOTOR," a strictly stock Star touring car, locked in high gear and traveling under offical observation, has conquered the famed Wawona road into the Yosemite Valley. The difficult climb was made carrying an official observer in addition to the driver, a feat never before accomplished by any motor car.

In a relentless campaign, covering the entire Pacific Coast territory, the Star car has been shattering hill climb records and accomplishing high gear victories in a series of power demonstrations which eclipse anything of a like nature ever before witnessed in the entire history of the automobile. The world-famous Wawona road is the latest victim to be added to the long list by the Star car.

F. C. Commins, Los Angeles Examiner newspaper man, served as official observer on the gruelling run from Los Angeles to Camp Curry, while Julius Dusevoir, factory testing engineer, drove the sturdy Star the entire distance. The trip was a non-stop run as well as the greatest high gear feat yet accomplished by the Star. It also proved an economy run for the Star.

No stops were made for oil, gas, water or mechanical adjustments throughout the 365 miles of the run. The route followed was the same as that taken by the pilots in the annual Los Angeles-Camp Curry economy run and is the shortest distance from the southern metropolis to Yosemite Valley. The route is over the Ridge Route with its countless turns, through Fresno and thence over the dirt roads and steep grades that lead through Coarse Gold, Fish Camp and Wawona.

Commins, observer on the run, a disinterested newspaper man, was amazed at the performance of the car. He said he knew the Star was a "performing fool" and that it was famous from one end of the country to the other for its many high gear and hill climbing records; but he was greatly surprised when the Star triumphantly levelled off the three greatest hills encountered on the route. The long climb out of Wawona, the steep grade to the sumit of Chinqapin Mountain and the long grind from Grouse Creek practically all the way to Inspiration Point caused him to marvel and comment enthusiastically on the great power of the famous "million dollar motor."

On the long, non-stop, high gear economy run the Star car used but 9¾ gallons of gasoline and scored an average of 36.91 miles to the gallon. This gas mileage record is far ahead of that of the winner in the recent Yosemite economy run in which Dusevoir drove a Star coach with an average of 27.96 miles to the gallon.

The feat is all the more remarkable when it is considered that it was but the third time Dusevoir had been over the course. Often a driver will make as many as ten practice runs before attempting an economy run into the Valley and no man is ever picked to drive on any kind of demonstration over the Yosemite roads unless he is a veteran of many past runs over the difficult route.

Another remarkable feature of Dusevoir's most recent achievement is the time in which he covered the 365 miles of highway in the Star. The car was officially checked out of Los Angeles at 5:13 a. m. and reached Camp Curry, where it was officially checked in at 7:35 o'clock that same evening. This makes Dusevoir's time 14 hours and 22 minutes and bears evidence of the fact that he pushed the Star over the roads and did not spare the car or conserve fuel.

Merely averaging 25.67 miles per hour from the heart of the business section of Los Angeles to Camp Curry is a feat worthy of much favorable comment; but making that average on a non-stop, economy and high gear run, is nothing short of wonderful. On high gear runs over the Yosemite roads in the past, drivers have taken many hours to cover short stretches; but the Star car rolled along at a comfortable touring speed and scored a four-way victory over all contenders for the same honors.

Officials of the Star organization were not satisfied with the showing of the Star Coach in he Yosemite economy run although Dusevoir made the highest gasoline mileage, 27.96 miles per gallon recorded by any entrant. This was done on Dusevoir's first run over the road, however, and H. W. Curtis, Director of Sales and Branches for the Durant Motor Co. of California, believed that he could greatly increase this milage record if he were given another opportunity at the wheel of a Star car.

STANFORD UNIVERSITY GIVEN VALUABLE SLIDES

Prof. Douglass H. Campbell, who retires this year as professor of botany at Stanford University, has given to the University his collection of about 1,000 slides gathered during his 34 years of service, many of which are the originals of illustrations in his various publications, and a large amount of alcoholic specimens which are valuable laboratory material. He has also presented to the University library about 100 bound volumes of separates on botanical subjects besides a large number which are unbound.

Mr. and Mrs. Leon Douglass and children expect to sail this afternoon for a few weeks in Honolulu.

What Else Can You Have That So Many Can Enjoy?

The automobile has become an indispensable part of American family life, because it is the one thing that gives an otherwise unobtainable pleasure equally to all members of the family. Let us demonstrate this in a STAR, a FLINT or a CADILLAC.

KELLY-SPRINGFIELD TIRES GOODRICH SILVERTOWN TIRES

FLINT--CADILLAC--STAR

PALO ALTO GARAGE

PHIL MIEBACH, (Stanford '14) Proprietor

Phones 575-576 *440 Emerson St.*

Elizabeth Arden Toilet Goods

Bring Beauty

TRELLIS BEAUTY SALOON ON MEZZANINE FLOOR

DRUGGISTS and PHOTOGRAPHERS

KENYON & CROW THE STORE WITH THE SMILE PALO ALTO

New Store Corner University and Waverly, Palo Alto

Telephone Palo Alto 2700

Publicly Owned

The Pacific Gas and Electric Company is owned by 30,270 Men and Women of California. This great family of owners represents more than 200 different occupations.

There are clerks and teachers, farmers and mechanics, housewives and even children.

The average ownership is 32 shares, and stockholders of the Pacific Gas and Electric Company are to be found in every city and hamlet in Northern California.

The P. G. and E. is a people's Company.

Pacific Gas and Electric Company

Owned, operated and managed by Californians

96-425

OUR COMIC SECTION

Along the Concrete

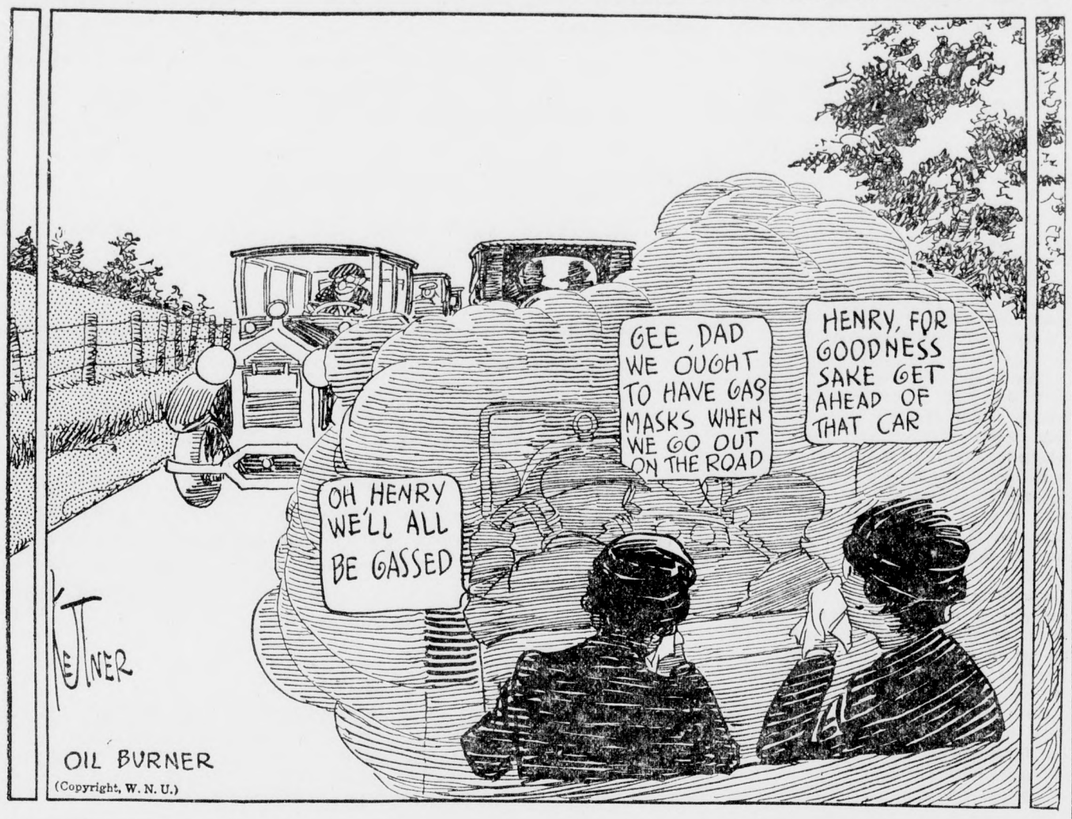

MICKIE, THE PRINTER'S DEVIL — Neither "Prophet" Nor "Profit"

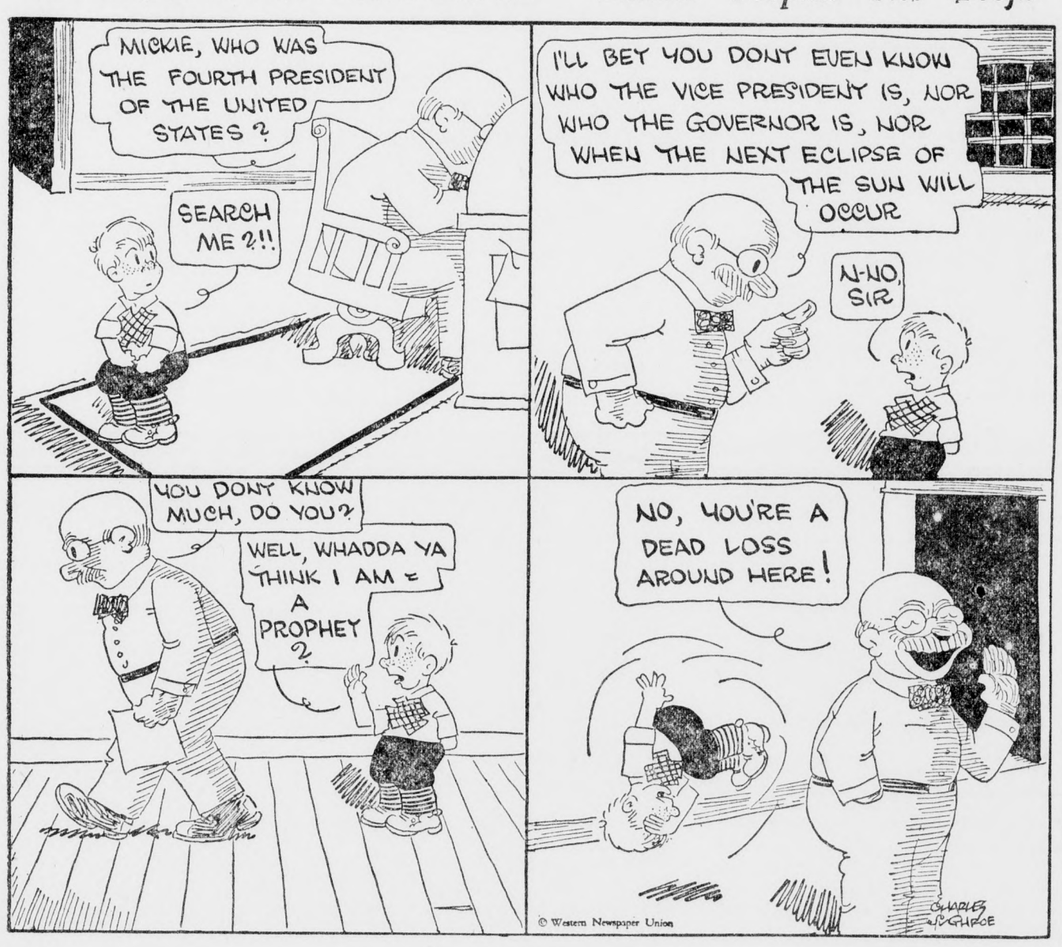

WHAT'S THE USE — The Wrong Door

Golden State
News of Interest to All

Dorothy Wong, 11-year-old Sebastopol Chinese girl, won the W. C. T. U. prize essay contest.

Construction has started on a 2-mile stretch of the Feather river boulevard near Marysville.

A fireman was killed and fifteen persons injured in a $1,500,000 Butchertown fire at San Francisco.

Twenty-eight motorists lost their licenses in May through revocation by the motor vehicle department.

Three Watsonville men were killed when their automobile ran off the Chittenden pass, near that town.

Owing to cold weather, the North San Juan Cherry carnival, scheduled for June 13 and 14, was postponed to June 20 and 21.

The industrial section of Modesto was imperiled by flames which destroyed fifty thousand feet of finished lumber, valued at $8,000.

Funeral services were held in Chico, June 15, for Mrs. Louisa F. Riffe, who twice crossed the plains by ox team from her home in Arkansas, once in 1854 and again in 1858.

Two hundred present and former residents of the Sierra valley and of Sierra county generally, gathered at McKinley park, Sacramento, for their annual reunion and basket picnic.

Rio Linda, a station in Sacramento county, will advertise to the world through one of the illuminating arches recently displaced by the Marysville city council.

Ending a successful placer season at Scales, forty miles west of Oroville, in the Sierra Nevadas, the Scales Syndicate is engaged in increasing water storage facilities for next season's work.

The cruiser, Capetown, of the British navy, will arrive in the San Francisco harbor September 8, to participate in the Diamond Jubilee celebration. The Capetown's complement will be 450 officers and men.

Foreshadowing another suit to test the validity of the state chiropractic act, Allan Mills of Richfield, proposes to appeal his conviction by a jury in Tehama county for practicing as a chiropractor without a license.

Lindsay will build a special school building to care for transient pupils of the district this coming term, who are mostly children of workers in the orange groves and cotton fields. New units will be added as needed.

The Gold Seekers of California, formed to assist in the revival of mining and to perpetuate traditions and customs of the "Days of '49," have filed articles of incorporation. Headquarters will be in Sacramento.

Suicide established an alarming record in San Joaquin county during May. With the exception of tuberculosis, heart disease and pneumonia, which invariably lead, suicide led all other causes of death, with six cases.

The estate of J. A. Filcher, who held a score of state offices during a colorful career extending over three decades, is valued at $39,052. Filcher died on his farm, near Sacramento, several months ago at 78 years of age.

The unmarked grave in the Sonora Masonic cemetery of "Dick Baker," in real life J. R. Stoker, who is immortalized in Mark Twain's "Roughing It," is to be designated by a monument. Subscriptions are being raised for erection of a tablet.

Following action of the county board of supervisors cutting the annual appropriation for the Kings county chamber of commerce from $14,000 to $10,000, the entire directorate of the chamber tendered resignations, effective July 1.

San Francisco's budget for the fiscal year 1925-26, calling for expenditures amounting to $35,061,109, provides for an increase of $1 a day in the pay of 2,400 city school teachers and is approximately $8,000,000 in excess of the 1924-25 budget.

The Eureka "reform" ticket achieved almost complete victory in the recent municipal election. A. W. Way was elected mayor, defeating the incumbent, and four councilmen were swept out of office, leaving but one surviving from the old regime.

Fifteen hundred scientists will assemble at Los Angeles, August3, for the seventieth meeting of the American Chemical society, planned as one of the biggest scientific conclaves ever held on the Pacific coast. Practically every state will send a delegation.

The University of California library has been supplemented by sixty volumes of Spanish literature and a copy of the Ashendene press "Decameron." The latter, the work of Albert M. Bender, will be included in the university's collection of examples of fine printing.

As the first step in an extensive building program at the various state institutions, which will entail an expenditure of approximately $4,000,000, the state has approved plans for the construction of four buildings at the Agnew and Stockton state hospitals immediately.

Floyd Hall, escaped San Quentin convict, will be placed on trial in the superior court at Sacramento on July 28 on a charge of assaulting Patrolman Clyde Nunn, who was shot in a chase for Hall and his pal, Joe Tanko, who is still at liberty. Hall pleaded not guilty to the charge.

State corporation taxes for the fiscal year 1925-26 will total $41,352,461.20, an increase over 1924 of $816,126.74. This revenue, together with $11,000,000 of income from other sources, will meet the government requirements of $52,000,000 for the new year and hence make unnecessary the levying of an ad valorem tax. General business franchises show a rather varied result for the year 1924. While the total of value represented shows a fairly normal result, the different classes of corporations show a rather wide variance, some industries being well below normal for the 12-month period, while others were satisfactorily above their conditions of the previous year. All transportation companies had reduced earnings in 1924, occasioned by unfavorable crop and travel conditions in that year.

During the third week in June, eighteen cases of infantile paralysis were reported to the state board of health and there were thirty-one cases in May. The disease is more prevalent than usual at this time of year, indicating, according to public health officers, the possibility of a more serious outbreak in the fall, a characteristic of the disease, it is said, being that when there is a marked increase in the number of cases in the spring and summer months there always have been more serious outbreaks in the fall. Physicians throughout the state are being urged by officials of the state board to report promptly all cases of this disease, technically known as poliomyelitis.

Maria Vikentieva Argunov, of Blagovercensk, Siberia, a former member of the old nobility of Russia, soon will receive from the state of California compensation to the amount of $853 for the death of her son, Vincenty, a laborer, at Caribou, August 12 last, according to a decision by the state industrial accident commission. The records show that once she was wealthy, but now her only holding is a 6-room house, and the rules of the local soviet require that she provide two of the six rooms for indigents.

The University of California leads state institutions of learning in the United States, according to a survey just completed by the department of the interior, bureau of education, at Washington, the report showing that the value of the university's property and equipment totals $17,782,539. California, with an endowment of $8,407,775, is the second richest state university in the country, Texas being first.

The San Diego high school board may purchase from the state the buildings and grounds of the state teachers' college at San Diego. The legislature, at its last session, authorized the sale of the property in connection with a program for a new and larger site. Money received from the sale will be applied to the purchase and equipment of a new site for the teachers' college.

Five scholarships for nurses who served with the United States army and navy during the World war will be established at the University of California next semester, through an offer from the estate of Laverne Noyes, of Chicago. The scholarships will be for the 1925-26 school year only. Recommendation of the applicants for the prizes will be made by the university.

Crazed by liquor, Frank Zaro, bus driver for the institution, ran amuck in the Mother Cabrini preventorium at Burbank and drove five hundred children from the building interior, clubbing more than a score of them. One sister was knocked down by Zaro and another hurled through a second story window. All the furniture in the institution was wrecked.

The San Jose board of supervisors has been petitioned to put a ban on the automobile race track, following the death on Sunday of Henry Beal, Pasadena driver, who was instantly killed when his machine crashed through the fence. Beal was the sixth killed in Sunday racing since the opening of the track, less than two years ago.

The state highway commission recently awarded contracts approximating $500,000 for the construction of a number of projects. They include the building of a 6-mile highway in the Truckee river canyon, the building of a bridge at Pismo Beach and a paving contract for the road between Healdsburg and Santa Rosa.

William Simpson, 90-year-old Confederate veteran and the oldest prisoner in California, has been granted his freedom. Liberty and a comfortable home for the rest of his days in the Kentucky Confederate home at Pewee Valley came at Folsom prison in the form of an immediate parole from the board of prison directors.

About twenty-four trainmen on the Hetch Hetchy logging road walked out in a body, which tied up the logging camps, affecting about 450 men.

At a meeting recently it was decided Willows will hold a 2-day celebration, July 4 and 5, under the auspices of the military and civic organizations of the town.

Fred Wiese, a miner, found a 1-carat diamond in the gold diggings of Sugar Loaf Peak, ten miles north of Oroville, of such brilliance that it is almost marketable without cutting. More than three hundred diamonds have been found in this district since miners have been engaged there and nearly $13,000,000 in gold has been taken out.

Married women will not be employed as teachers in Modesto under an order of the board of education. Married women already employed and girls who are married before July 1 will not be affected by the ruling.

Tell Your Shoe Repairman You Want "U. S." SPRING-STEP Rubber Heels
A Better Heel to Walk On
And for the best shoe sole you ever had—
USKIDE
—the Wonder Sole for Wear
United States Rubber Company

Highways Said to Need Thick Edges

That highways should be designed with extra thick edges is indicated by a survey of where, on the road, automobiles run, made by the United States bureau of public roads. This investigation showed that motor trucks are habitually driven closer to the edge than passenger vehicles and that the heaviest load placed on the pavement comes about six inches from the edge, says Science Service.

Drivers of speeding vehicles tend to crowd closer to the center. Too high a crown to the highway or a bad shoulder also cause machines to run nearer the middle. Highways should be at least 18 feet wide and not over 20 feet wide for two-way traffic, the experts declared after the observations.

Insist on having Dr. Peery's "Dead Shot" for Worms or Tapeworm and the druggist will get it for you. 372 Pearl St., N. Y. Adv.

Couple Long Married

Friends of Mr. and Mrs. Andrew H. Keck of Allentown, Pa., believe that the couple hold the country's long-time record for married life. In a short time they are to celebrate the seventy-sixth anniversary of their wedding. Mr. Keck is ninety-seven and his wife is two years younger. They are in good health, and until two years ago Mr. Keck was actively engaged in the lumber business, which he entered in 1850.

Caged Rats Work Puzzle

Prof. J. F. Dashiel of the University of North Carolina has utilized the cross-word puzzle craze to train rats. He has built a maze of paths and runways leading to hidden food, and the caged rats have been put to work solving the quickest way to reaching it. He has found that some readily learn that the hardest route is the quickest. Of nine rats used in the study three showed they learned while the others remained just as stupid at the end of 100 attempts as at the beginning.

Sensitive Seismograph

The seismograph at Volcano house on the great Hawaiian volcano Kilauea is so sensitive that it records vibrations caused by an oil engine in the power house about 800 feet away.—Science Service.

Sure Relief FOR INDIGESTION
BELL-ANS FOR INDIGESTION 25 CENTS
6 BELL-ANS Hot water Sure Relief
BELL-ANS
25¢ AND 75¢ PACKAGES EVERYWHERE

DAISY FLY KILLER PLACED ANYWHERE ATTRACTS AND KILLS ALL FLIES. Neat, clean, ornamental, convenient, cheap. Lasts all season. Made of metal, can't spill or tip over; will not soil or injure anything. Guaranteed effective. Sold by dealers, or 5 by EXPRESS, prepaid, $1.25.
HAROLD SOMERS, 150 De Kalb Ave., Brooklyn, N. Y.

FOR OVER 200 YEARS
haarlem oil has been a world-wide remedy for kidney, liver and bladder disorders, rheumatism, lumbago and uric acid conditions.
GOLD MEDAL HAARLEM OIL CAPSULES
correct internal troubles, stimulate vital organs. Three sizes. All druggists. Insist on the original genuine GOLD MEDAL.

The Purity of Cuticura Makes It Unexcelled For All Toilet Purposes

Dickey's OLD RELIABLE Eye Water relieves sun and wind-burned eyes. Doesn't hurt. Genuine in Red Folding Box. 25c at all druggists or by mail. DICKEY DRUG CO., Bristol, Va.-Tenn.

LOCAL HAPPENINGS

Mrs. Harry R. Seale is enjoying a pleasant vacation at Santa Cruz.

Mrs. James T. O'Keefe entertained the Companions Card Club at her home here Wednesday evening.

Supervisor and Mrs. John MacBain are enjoying their vacation at Gilroy Hot Springs.

Sixteen young men of St. Patrick's Seminary here were ordained to the priesthood of the Caholic Church with impressive services in St. Mary's Cathedral, San Francisco, last Saturday morning. The Sacrament of Holy Orders was administered by Archbishop Hanna. This was the largest class ever admitted to the priesthood upon the Pacific Coast.

Mr. and Mrs. Charles H. Merrilll entertained a number of friends at a "farm hands' reunion" dinner at their home here Tuesday evening. Guests appeared in appropriate costume and dinner was served at a long table on the porch in traditional country style.

The baggage room at the Southern Pacific Station here was robbed again last Sunday night for the third time in a couple of years. Two trunks and a suit case were rifled. One of the trunks was the property of Miss Esther O'Keefe who had just come home from Sacramento where she has been teaching for the past year. The other trunk and suit case was the property of a St. Patrick's Seminary student. No trace has been found of the missing articles.

Menlo Parlor, Native Daughters of the Golden West are holding another card party in Duff and Doyle hall on Monday evening. The committee consisting of Mrs. Fred Worrell, Mrs. F. Derry, Mrs. V. Michel and Mrs. M. Maloney assure the public of a good time. A number of attractive prizes are being offered. Score cards are but 25 cents. Come up and enjoy a pleasant evening and help the Native Daughters augment their funds.

The Star Groceteria
H. A. CHANDLER
West Side of Highway at Oak Grove
MENLO PARK, CALIFORNIA
"EVERY PRICE A SPECIAL"

Oval tin Sardines	.10
Namco Crab	.33
Shrimp	.16
Deviled Ham	.16
New Potatoes, 7½ lbs.	.25
Crystal White Soap, 6 for	.23
Coffee, pound	.35
Corned Beef, can	.23
Honolulu Lady Pineapple 2½ tin	.24
Cherries in cans	.10
S. S. C. Peaches, can	.19
Fruit Salad	.35
Sauerkraut, can	.10
Golden Bantam corn	.18
Vinegar, pint	.09
Catsup, pint	.19

We have everything in GROCERIES and our prices are RIGHT.

The children of Trinity Episcopal Sunday School of Menlo Park enjoyed their annual picnic at Kendall Dell Tuesday. They were accompanied by their teachers and the Rev. Ralph Smith, the rector

The Kansas-Oklahoma State Society will hold its annual picnic Saturday afternoon and evening, June 27th, at Alum Rock Park. All are to bring basket lunches which will be served early in the evening. Coffee will be furnished by the Society. The committees in charge are planning a splendid time for all. All former residents of these states and their friends are cordially invited.

TRINITY EPISCOPAL CHURCH

8 a. m. Early Celebration.
9:30 a. m. Church school.
10:30 a. m. Morning Prayer and Sermon.
7:30 Evening Service.
Rev. Ralph Smith, rector, residence Ravenswood and Laurel avenues. Phone, Palo Alto 1631-J.

Last Saturday over 200 residents of the Ravenswood School District enjoyed a picnic at Kendall Dell under the auspices of the Ravenswood Chamber of Commerce. The morning was devoted to races, a barbecue was served at noon and games occupied the afternoon.

Rising Young Star Fond of Cooking

Claiborne Foster, that clever little lady who makes Barry Connors' play, "Applesauce," the outstanding comedy success of the year, is an extraordinary young woman. She is generally recognized as one of the rising young stars of the American stage and her services and company are always in demand but such is her nature that she shuns the "bright lights" and leads a simple and unostentatious life wherever she may be. She is essentially a home girl, being passionately fond of cooking, an art at which she is very adept, and much of her leisure time is spent in the modest little kitchenette of her apartment. When not playing in some production, Miss Foster may be found at her home a short distance from New York city, where she revels in the joys of cooking for the whole family and her friends and spends her vacations doing the work of the ordinary housewife.

Claiborne Foster.

There are two dishes which are regarded with more favor by Miss Foster, than are any others. These are Bronk shrimps and chicken en casserole. She uses the simplest of formulas but insists upon the purest of ingredients, using pure butter, and evaporated milk. The recipes that she uses are:

Bronk Shrimps.

2 cups shrimps, canned or fresh	Yolks 2 eggs
4 tbsp. fat	½ cup evaporated milk
½ tsp. salt	½ cup water
Few grains cayenne	1 tbsp. flour
	2 tsp. lemon juice

Clean the shrimps, and cook in half the fat for 2 minutes; add seasoning and lemon; cook 2 minutes longer. Remove shrimps and make a white sauce of the remaining fat, flour and milk; when thickened add yolks of eggs slightly beaten, stirring in quickly and cooking two minutes; add the shrimps.

Chicken en Casserole.

1 tender chicken for roasting	1 cup evaporated milk
2 tbsp. butter	1 tbsp. chopped parsley
2 tbsp. lard	2 cups chopped mushrooms
Salt and pepper	
1 pint hot water	

Clean chicken, split down back, and lay breast upward in casserole. Spread fat over breast, dust with salt and pepper, add hot water, cover closely and cook in hot oven one hour. When nearly tender put in evaporated milk, mushrooms and parsley. Cover again, and cook 20 minutes longer. Serve hot in casserole.

Ladies' and Gents'
HIKING and TENNIS SHOES
Men's 16-inch, moccasin tip ORO Shoes, Extra Special Price
Ladies' Napa-Tan Hiking Shoes, Extra Special Price
Menlo Shoe Store
E. J. McLoughlin, Prop.
Menlo Park *Highway*
OPEN TILL 9 P. M. SATURDAYS

Menlo Theatre
PERFORMANCE STARTS 7:45

SATURDAY, JUNE 27
"The Midnight Express"
An excellent railroad story.
"The Iron Mule," Comedy

SUNDAY, JUNE 28
"The Narrow Street"
Matt Moore and Dorothy Devore will make you laugh in this big comedy-drama.
"GO-GETTERS" No. 5
NEWS REEL

THURSDAY, JULY 2
HOOT GIBSON in "The Saddle Hawk"
"TARZAN" No. 6
"Watch Your Pet," Comedy

Father Kennedy of the Church of the Nativity here is attending the retreat being held at St. Joseph's College, near Mountain View this week.

Mr. and Mrs. A. G. C. Hahn entertained about twenty guests at a dinner and garden party at heir home here Thursday evening.

LARGE NUMUBER OF CHILDREN PROMOTED IN MENLO SCHOOL

Continued from Page One

Harold Hoss.
Ichero Inouye.
Robert Perry.
Harold Stiller.
Maurice Thomas.
Henry Van Honsebroucht.
McBurnett Wolfe.
Seaborn Campbell.

Promoted to the Sixth Grade.

George Aabel.
Wilma Allguire.
Helen Buckhaut.
Eva Chew.
Charlotte Grill.
Elmer Cappelmann.
Francis Guibarra.
Harold Hoff.
Albert Jacobsen.
Joy Martin.
James McLoughlin.
Evelyn Mettler.
Alfred Miller.
Victoria Parsons.
Lucille Patterson.
Jack Pembroke.
Jean Quayle.
Masato Sakamoto.
George Shjoia.
June Van Horne.
Walter Worrell.
Lee Wong.
Willie Ratjie.
Kazuyoshi Okuma.
Roy Trivitte.
Fay Terramorse.
Kaoru Sato.

Promoted to the Seventh Grade.

Marjory Paris.
Jessie Wolfe.
Louise Calloe.
Zeph Dupont.
William Gilroy.
Betty McAboy.
Edward McLoughlin.
Norman Neilson.
Lionel Schroder.
Bertrand Shelbourn.
Starleigh Thomas.
Esther Bearce.
Eva Enten.
Martha Ekholm.
Tomiye Inouye.
Laura Iwaski.
Satoshi Iwaski.
Harry Perry.
Kiyoko Shioya.
Isami Yamakashi.

Promoted to the Eighth Grade.

Lillie Chew.
Allan Ekholm.
Edna Grill.
Tania Gnoocheff.
Evangeline Landis.
Peter Lawler.
Robert Morris.
Rida Okada.
Blair Oram.
Elmer Neilson.
Eileen Paris.
Joe Reynolds.
Jim Stentiford.
Rothell Thurman.
Katherine Van Horne.
David Walker.
Lowell Wolf.
Fred Worrell.

LOS ENCINOS FRUIT EXCHANGE
Very Sweet Oranges
Juicy Lemons
PURE HONEY
35c Pint 65c Quart
Highway at Atherton

Health and Home

THE WOMAN WHO WORKS

In this new order of things, with women, both married and single, broadening their business activities, a very serious problem arises. It is the problem of what, when, and where to eat.

Breakfast is always a hurry-up meal for the men but much more so for the woman who goes to business. Luncheons, of course, are taken in the lunchrooms and restaurants in the business districts and are no problem. But how about dinners? Shall they, too, be restaurant meals or can they be so planned that business women may enjoy the home cooking of which they are so fond? Take away the element of haste and anxiety and in its place put carefully thought-out menus, well planned and easily prepared, and home dinners will again regain their high favor with the working housewife.

One of the big worries is frequently with the milk. Did it come? Is it fresh? Is it frozen? Has the milkman been paid? Are the bottles washed and set out? However, there is no cause for worry about milk. Why not keep a dozen cans of evaporated milk in your pantry? There are large cans, equal to a quart of milk and smaller cans that will meet the lesser needs.

For evaporated milk is just pure, fresh milk with more than half the water missing. This water can be replaced in a jiffy, if you so desire or you can use it as cream if rich and creamy foods are desired.

Here are a few recipes that may be used by "The Woman Who Works" for forming her plans for self help and good home cooking.

Scalloped Ham and Potatoes.

1 pound smoked ham	1½ cups water
6 medium potatoes	1 green pepper (may be omitted)
1½ cups evaporated milk diluted with	Flour

Cover the bottom of an oiled baking dish with sliced, raw potatoes. Sprinkle with flour and pieces of ham ½ inch square. Repeat until dish is full. Fill dish ¾ full of diluted milk. Bake until potatoes are tender.

Eggs en Casserole.

6 hard-boiled eggs	¾ cup evaporated milk
3 tomatoes	¾ cup water
2 tbsp. butter	½ cup grated cheese
3 tbsp. flour	Buttered crumbs
2 tsp. salt	

Cut hard-boiled eggs in half and arrange around the edge of a greased casserole. Slice tomatoes in center of dish. Make a white sauce of the milk, water, fat and flour. Add cheese and stir over a low fire until cheese is well mixed and smooth. Four over tomatoes and eggs. Cover with crumbs and bake twenty minutes in a moderate oven.

Mr. and Mrs. E. W. Ellis are the proud parents of a bouncing baby boy, born at the Palo Alto Hospital on Wednesday.

W. O. Horabin
Hay, Grain, Wood, Coal, Fertilizers
Phones P. A. 59 and 60
526 Bryant St. Palo Alto

Phone 385-J
MENLO PARK FRENCH LAUNDRY
Dioze & Darracq, Props.
We Call and Deliver in Los Altos, Palo Alto, Redwood City, San Mateo and Burlingame
Santa Cruz Ave. Menlo Park

Phone Redwood 339-J
James Crow Co.
Oldest Funeral Parlors in San Mateo County.
Funeral Directors and Embalmers
Home-like Parlors and
W. A. CROWELL
Deputy Coroner
San Mateo County, Calif.
Redwood City, California

Phone 315-J 804 Main Street
REDWOOD CITY FRENCH LAUNDRY
Mr. Dupont, Proprietor
Laundry Work Promptly Done
Prices Reasonable
Phone Us, We Call and Deliver
Redwood City, California

Cullen Co.
FEED FUEL FERTILIZER
Phone Redwood 441
Redwood City Calif.

Announcement
Dr. C. H. Woodruff of Abrams College of Electronic Medicine of San Francisco, specializing in the diagnosis and treatment of diseases by the Electronic Reactions of Abrams, E. R. A.
OFFICE and RESIDENCE
232 Lytton Avenue, Palo Alto Phone P. A. 1752

Pearl E. Ragan School of Dancing
Children's Classes Saturday from 1 to 6 p. m.
Adult Classes, Friday Evening from 8 to 10
PRIVATE LESSONS BY APPOINTMENT
DUFF & DOYLE HALL, MENLO PARK
PHONE MENLO PARK 1940-J-5

LAWN HAIR-CUTS
All nice clean even jobs need good sharp tools for the proper work and the same applies to your lawn. In order to make the lawn have that smooth carpet-like appearance, you should have one of our smooth cutting, easy running, self-sharpening and self-adjusting lawn mowers and then water your lawn with our Leak Proof or Electric Water Hose and sprinklers.
ASPINALL & RYAN
BOOST MENLO BY TRADING AT HOME
Cutlery Phone M. P. 1494-J Tools

PLAY DAYS!
Milk gives the growing child power to play harder, and to study harder at school. And this milk should be pure and rich in food value, as STANFORD DAIRY MILK always is!
Wise mothers urge their boys and girls to drink at least a pint or more, of STANFORD DAIRY MILK a day to build muscle and strong bones. STANFORD DAIRY MILK is produced under ideal conditions—the cows are milked in one of the best milking barns in the state. Insist upon STANFORD DAIRY MILK, the milk which will give your kiddies the nourishment they need.
STANFORD DAIRY
W. C. WILBUR, Prop. PHONE MENLO PARK 1942-W-2

EVERYBODY FEELS like "cutting up" around the Fourth of July. It just suits all good, patriotic Americans. And —speaking of suits—how are you off for a new one for Independence Day? Here you will find a selection of fine new materials in smart shades and fancy designs. You are certain of stylish cut and perfect fit at reasonable cost if you have us make your next suit.
W. WILKINSON
LADIES' and GENTS' MERCHANT TAILOR
18-19 MADISON THOITS' BUILDING
156 UNIVERSITY AVENUE PALO, ALTO CALIF.

Advance Lumber Company
MENLO PARK
JOHN VOLLMER, Manager
Quality Lumber
PHONE P. A. 2291
Highway and Ravenswood Ave. Menlo Park